Marshall's
FITZROY TRACKS PTY LTD
MANUFACTURING ENGINEERS SINCE 1880 ABN 67 693 693 079

AUSTRALIAN MADE®
Australian DESIGN AWARD®

3 RAMAGE ST BAYSWATER VIC 3153
Phone: (03) 9429 9044 **Email:** info@fitzroytracks.com.au Website: www.fitzroytracks.com.au

FITZROY® BALL BEARING DOOR TRACKS

THE FACTS

"Fitzroy" Ball Bearing Tracks have built an enviable reputation for quality, service and performance in both Australia and New Zealand over the past 80 years.

"Fitzroy" Tracks have been specified repeatedly by leading architects and engineers for a variety of industrial, commercial and domestic applications. The heaviest rated "Fitzroy" track is engineered to carry more than one tonne.

The full working life of a "Fitzroy" track has never been determined for we are yet to discover one that has worn out if reasonably maintained. Because "Fitzroy" tracks have become so important to the Australian building industry we instructed the Engineering School at Melbourne University to thoroughly test every working part of a standard length of track. Their findings make us justly proud to publish a resumé of that report. The original report is lengthy, detailed and technical, and is available for perusal at this office at any time.

Melbourne University employed the latest scientific instruments to calculate wear while plastic surface replicas were made of selected tongues on the ball cage in an endeavour to assess tongue wear.

The Test:
A typical door of 102 kg was set up on the test track. It was then fully opened and closed 130,000 times, an actual distance of 160 kilometers. Note: The only maintenance was lubrication.

The Result:
After exhaustive activity the track was still in excellent condition with no visible signs of deterioration. In fact the track was considered to be only just "run in".

UNIVERSITY REPORT EXTRACTS
Cage Wear:
"Neither surface profiles nor photographs of the 'tongues' showed any evidence of wear." "Gap Measurements between tongues using taper parallels did not show any effect of wear, the gap measurements remained unchanged during the entire test."

Ball Wear:
"No change in diameter of the sample balls was found."

Track Wear:
"After the test the door continued to operate quite smoothly. The only effect of wear seemed to be the formation of a minute groove found on the track surface." "The initial surface was fairly rough milled while the groove had a good finish. The average depth of the groove was .0005" or less."

Conclusions:
"The 'Fitzroy' track showed some signs of wear (.0005 or less) most of which occurred during the run-in, after which the wear rate dropped to a fairly low and more or less constant value." "In this particular case the track wear for all practical purposes can be probably regarded as negligible. If anything, it might be regarded as beneficial, since the surface finish had been improved and the area of contact of the balls had been increased." "Since no wear at all has been detected on the ball cage after 258 hours of continuous operation it is seen that the effective life of the ball retaining cage is likely to be very long." "From this test it is impossible to give an estimate of the life of the track." "It can only be definitely stated, however, that after the test surfaces on which the balls roll have worn very little and have a low rate of wear, while the cage and the balls have shown no measurable wear at all."

Signed:

R.H. BROWN, B.Mech.E., S.M. (M.I.T.),
Lecturer in Mech. Engineering,
Melbourne University. 1:12:61.

Marshall's

FITZROY® BALL BEARING DOOR TRACKS

A RANGE OF CAPACITIES IN ALLOY AND STEEL

ALLOY LIGHT A 100

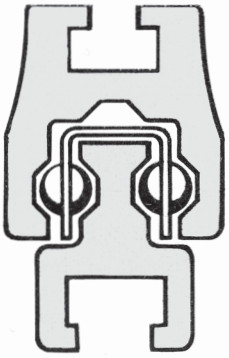

ALLOY MEDIUM A 500

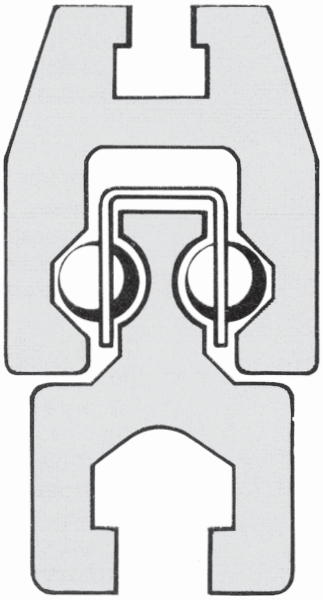

STEEL LIGHT S 100

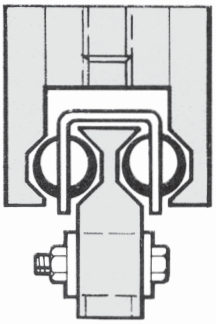

STEEL MEDIUM S 500

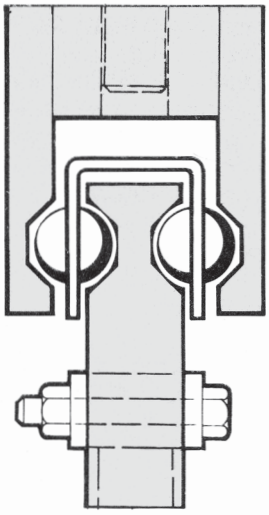
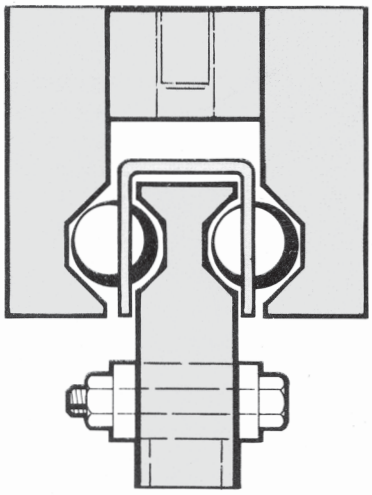
STEEL HEAVY S 1000