S100WD

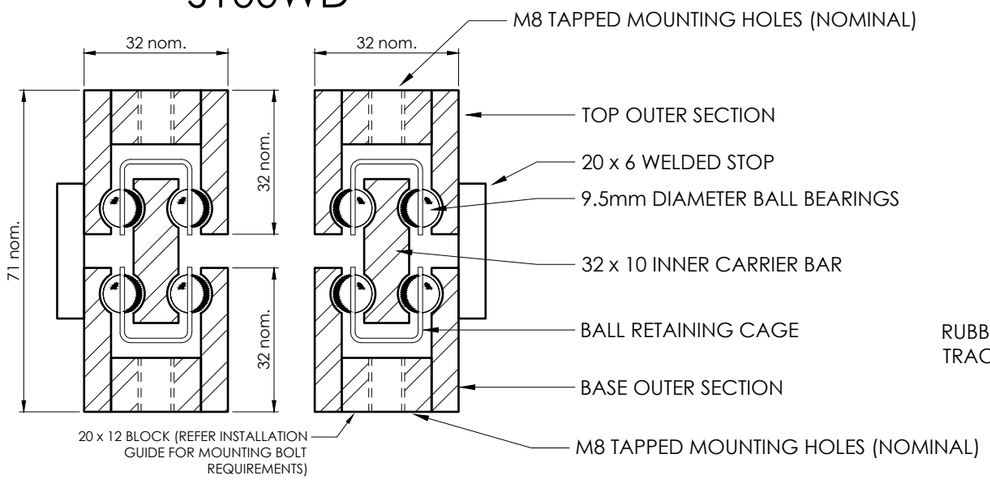

LEFT HAND TRACK

SCALE 1:1

RIGHT HAND TRACK

SCALE 1:1

S100WD ISOMETRIC VIEW
FOR ILLUSTRATION PURPOSES ONLY
DO NOT SCALE

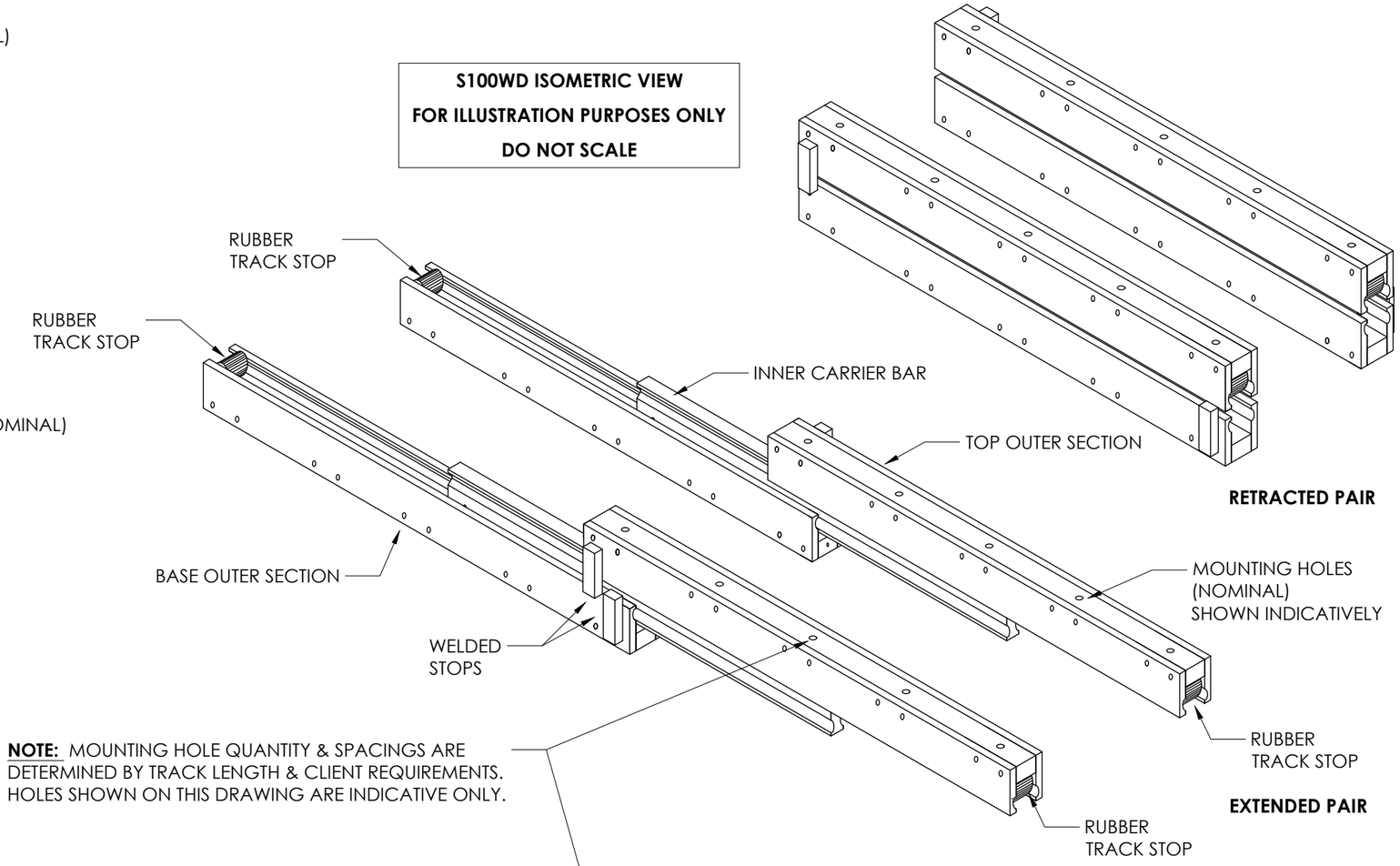

RETRACTED PAIR

EXTENDED PAIR

PLAN VIEW OF 1 - PAIR OF SLIDES

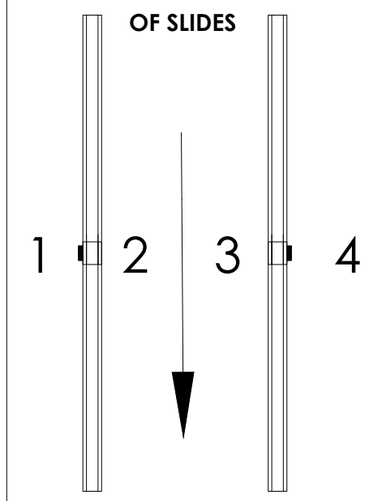

EXTENDED VIEW

OPTIONAL SPRING LOCK BOLT TYPE & POSITION NOMINATED BY CLIENT FOR LOCKING OPEN & CLOSED. REFER SPRING LOCK BOLT LEAFLET.

NOTE: MOUNTING HOLE QUANTITY & SPACINGS ARE DETERMINED BY TRACK LENGTH & CLIENT REQUIREMENTS. HOLES SHOWN ON THIS DRAWING ARE INDICATIVE ONLY.

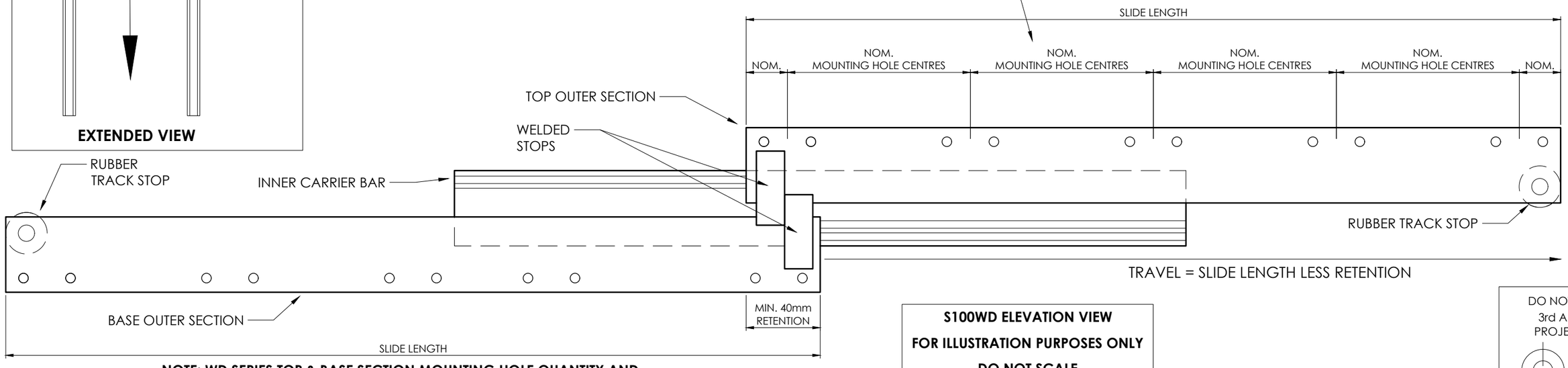

S100WD ELEVATION VIEW
FOR ILLUSTRATION PURPOSES ONLY
DO NOT SCALE

DO NOT SCALE
3rd ANGLE PROJECTION

NOTE: WD SERIES TOP & BASE SECTION MOUNTING HOLE QUANTITY AND SPACING ARE TYPICALLY THE SAME (OR AS PER CLIENT REQUIREMENTS)

FITZROY®
BALL BEARING SLIDING TRACK SYSTEM

SHEET No	DATE	TITLE		TRACK TYPE	REV.
SHEET 01	17.09.26	S100WD STEEL LIGHT FITZROY SLIDE SYSTEM	TOLERANCE: +/- 1mm F0R DIMENSIONS & HOLE CENTRES.	S100WD	0
		FITZROY TRACKS PTY LTD 3 RAMAGE ST, BAYSWATER. VIC 3153 PH: (03) 9429 9044	NOTE: THIS DRAWING AND DESIGN IS THE PROPERTY OF FITZROY TRACKS, AND MUST NOT BE COPIED, LOANED OR OTHERWISE USED WITHOUT THEIR EXPRESS PERMISSION OR LICENCE IN WRITING.		