S500W

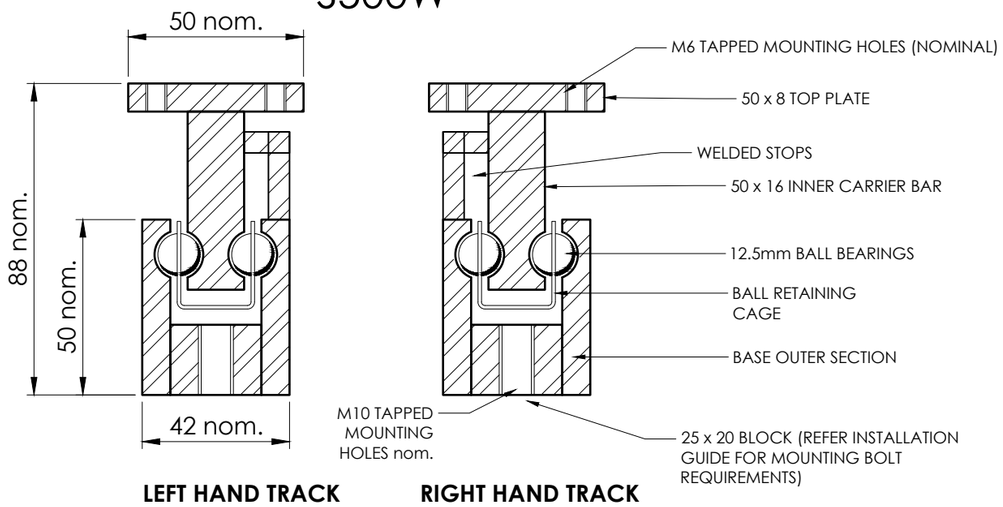

LEFT HAND TRACK

SCALE 1:1

RIGHT HAND TRACK

SCALE 1:1

PLAN VIEW OF 1 - PAIR OF SLIDES

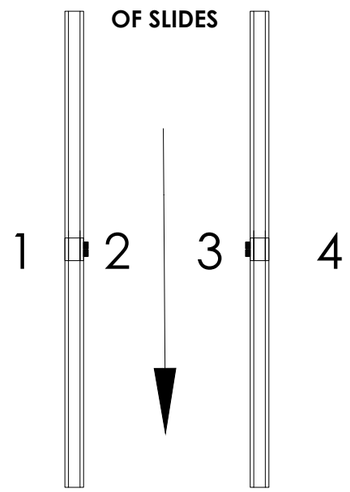

EXTENDED VIEW

OPTIONAL SPRING BOLT TYPE & POSITION NOMINATED BY CLIENT FOR LOCKING OPEN & CLOSED. REFER SPRING LOCK BOLT LEAFLET.

S500W ISOMETRIC VIEW
FOR ILLUSTRATION PURPOSES ONLY
DO NOT SCALE

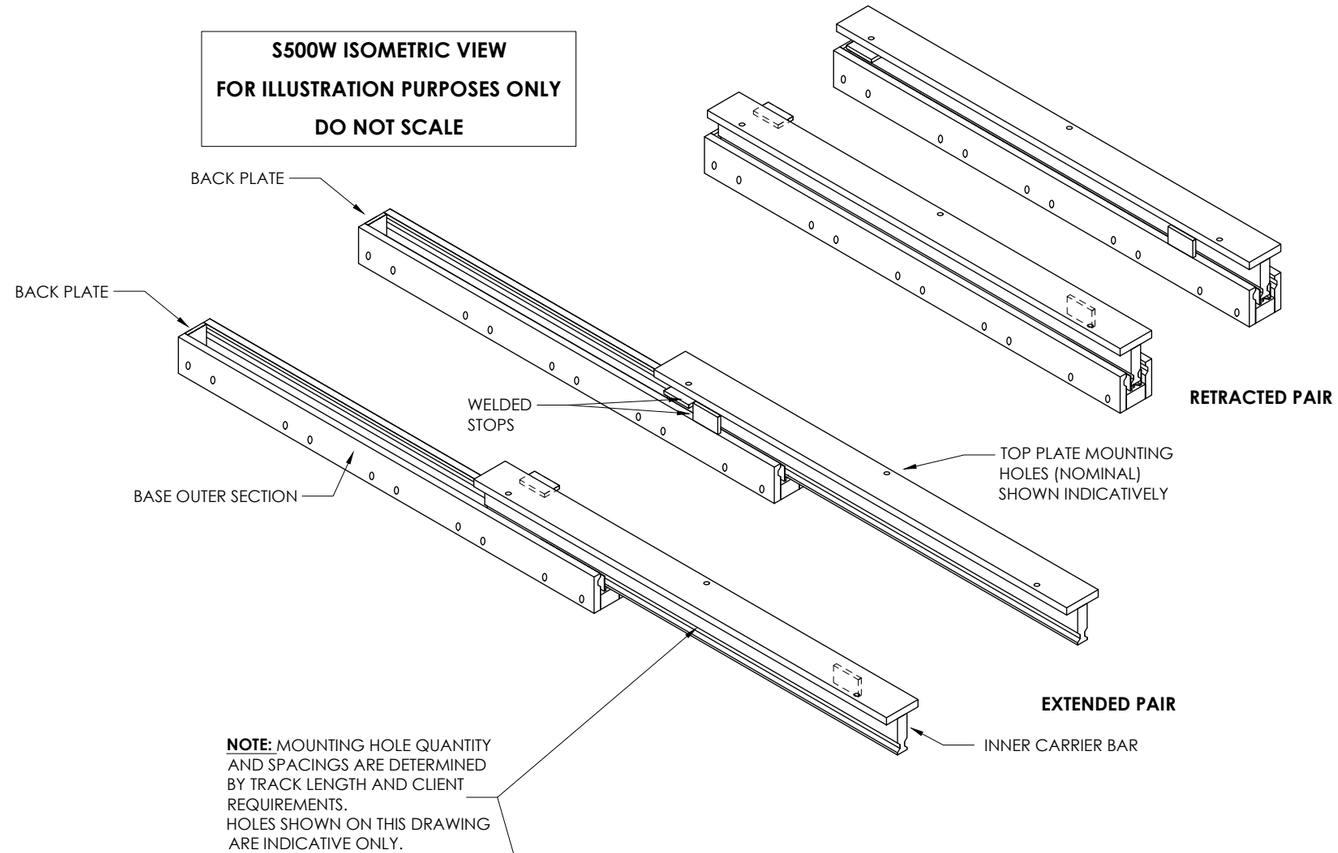

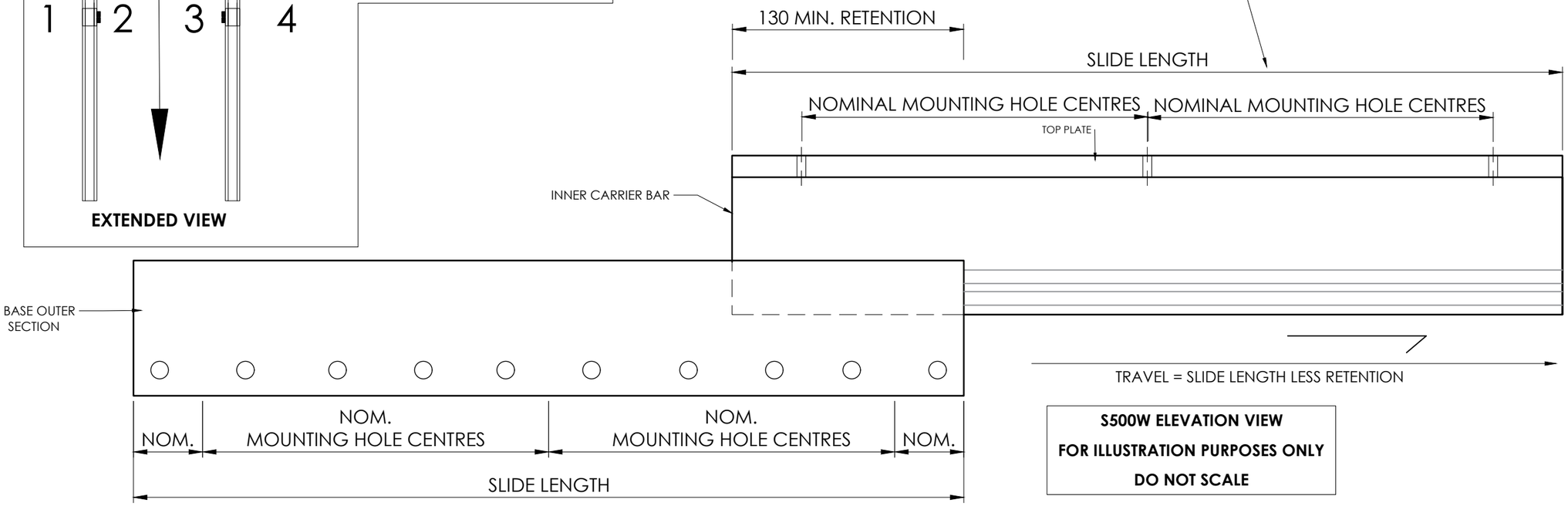

S500W ELEVATION VIEW
FOR ILLUSTRATION PURPOSES ONLY
DO NOT SCALE

DO NOT SCALE
3rd ANGLE PROJECTION

FITZROY®
BALL BEARING SLIDING TRACK SYSTEM

SHEET No	DATE	TITLE		TRACK TYPE	REV.
SHEET 01	17.09.26	S500W STEEL MEDIUM FITZROY SLIDE SYSTEM	TOLERANCE: +/- 1mm F0R DIMENSIONS & HOLE CENTRES.	S500W	0
		FITZROY TRACKS PTY LTD 3 RAMAGE ST, BAYSWATER. VIC 3153 PH: (03) 9429 9044	NOTE: THIS DRAWING AND DESIGN IS THE PROPERTY OF FITZROY TRACKS, AND MUST NOT BE COPIED, LOANED OR OTHERWISE USED WITHOUT THEIR EXPRESS PERMISSION OR LICENCE IN WRITING.		