S500WD

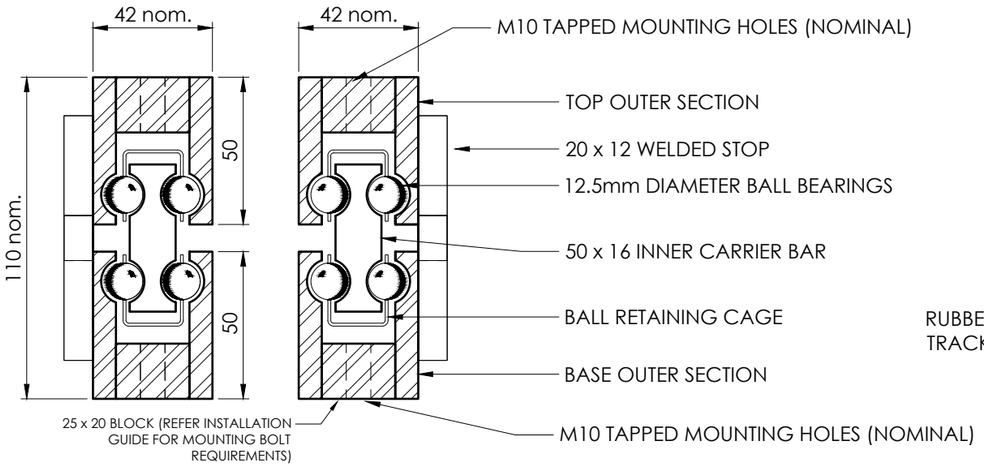

LEFT HAND TRACK

SCALE 1:1

RIGHT HAND TRACK

SCALE 1:1

S500WD ISOMETRIC VIEW
FOR ILLUSTRATION PURPOSES ONLY
DO NOT SCALE

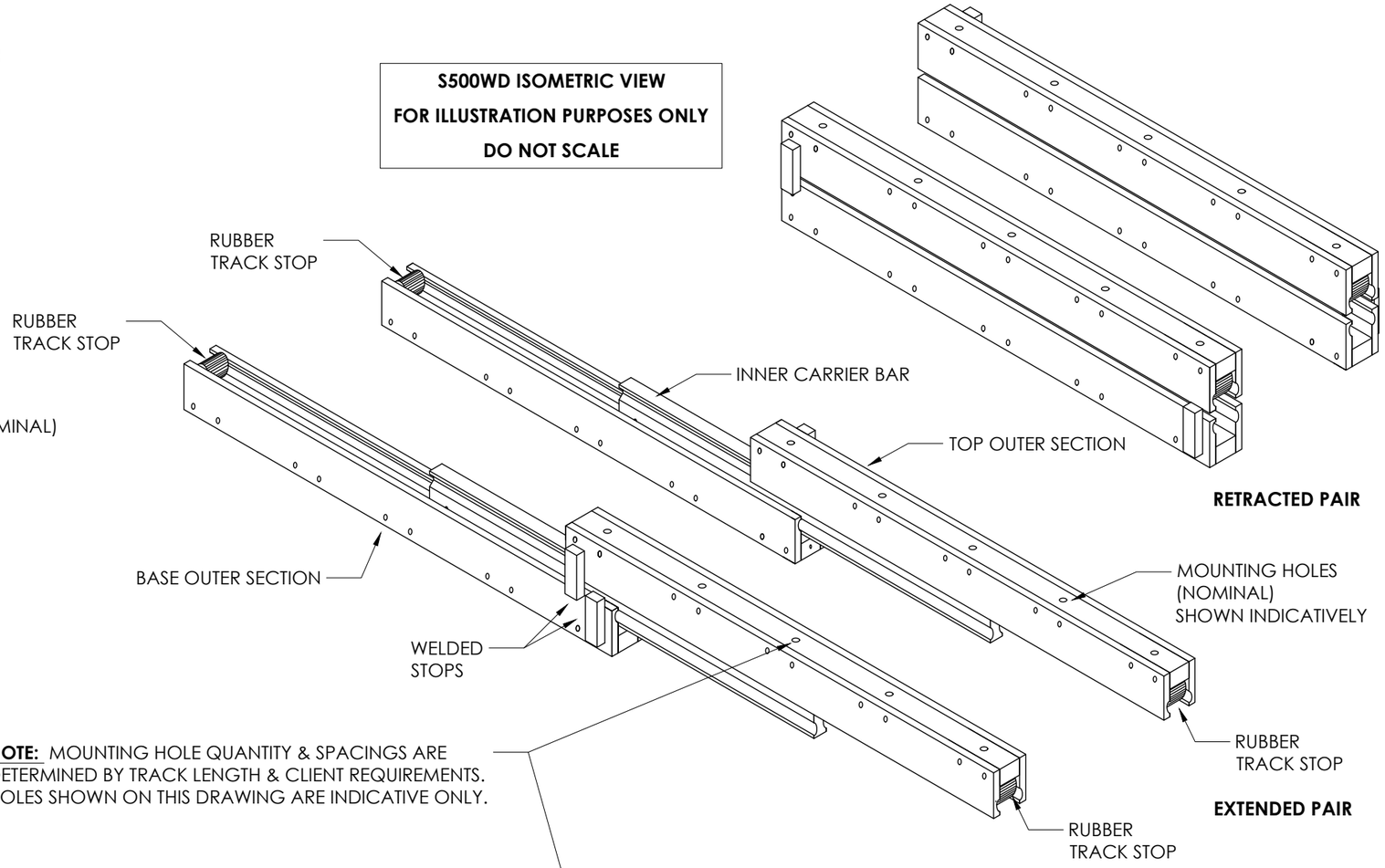

RETRACTED PAIR

EXTENDED PAIR

PLAN VIEW OF 1 - PAIR OF SLIDES

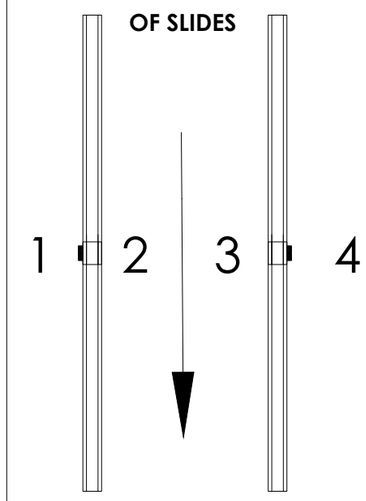

EXTENDED VIEW

OPTIONAL SPRING LOCK BOLT TYPE & POSITION NOMINATED BY CLIENT FOR LOCKING OPEN & CLOSED. REFER SPRING LOCK BOLT LEAFLET.

NOTE: MOUNTING HOLE QUANTITY & SPACINGS ARE DETERMINED BY TRACK LENGTH & CLIENT REQUIREMENTS. HOLES SHOWN ON THIS DRAWING ARE INDICATIVE ONLY.

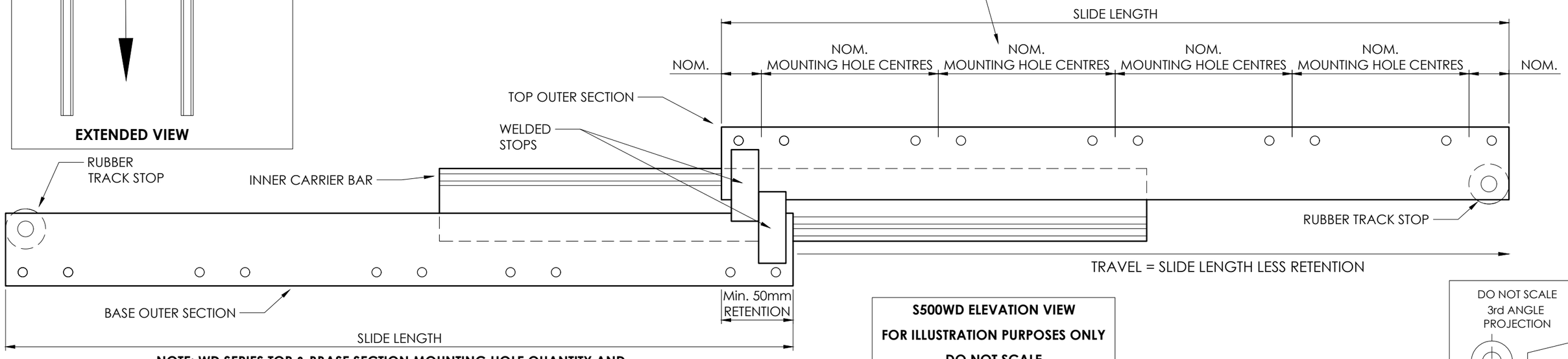

S500WD ELEVATION VIEW
FOR ILLUSTRATION PURPOSES ONLY
DO NOT SCALE

DO NOT SCALE
3rd ANGLE PROJECTION

NOTE: WD SERIES TOP & BBASE SECTION MOUNTING HOLE QUANTITY AND SPACING ARE TYPICALLY THE SAME (OR AS PER CLIENT REQUIREMENTS)

FITZROY®
BALL BEARING SLIDING TRACK SYSTEM

SHEET No	DATE	TITLE
SHEET 01	14.08.26	S500WD STEEL MEDIUM FITZROY SLIDE SYSTEM

FITZROY TRACKS PTY LTD
3 RAMAGE ST, BAYSWATER. VIC 3153 PH: (03) 9429 9044

TOLERANCE: +/- 1mm F0R DIMENSIONS & HOLE CENTRES.

NOTE: THIS DRAWING AND DESIGN IS THE PROPERTY OF FITZROY TRACKS, AND MUST NOT BE COPIED, LOANED OR OTHERWISE USED WITHOUT THEIR EXPRESS PERMISSION OR LICENCE IN WRITING.

TRACK TYPE	REV.
S500WD	0